UNITYESS™

ENERGY WITH INTELLIGENCE

AC Coupling of Large Scale Lithium-Ion Batteries:

Why do Voltage Levels Matter?

1800 2026 252

www.unityess.ai

TECHNICAL WHITEPAPER

Why Do We Couple Batteries at Different Voltage Levels?

A guide to AC coupling voltage selection for C&I and utility-scale Battery Energy Storage Systems

April 2026 | WP-2026-001 | **unityess.ai**

Why Voltage Matters

Every battery energy storage system must be electrically coupled to the facility it serves. The voltage at which this coupling occurs is not an arbitrary choice — it is a fundamental design decision that cascades through cable sizing, switchgear ratings, conversion losses, and ultimately, project economics.

The governing relationship is simple: $P = \sqrt{3} \times V \times I \times \cos\phi$. For a given power rating, raising the voltage reduces the current proportionally. Lower current means thinner cables, smaller busbars, lighter switchgear, and — critically — lower resistive (I^2R) losses in every metre of conductor between the battery and the point of common coupling.

But higher voltage also introduces complexity: insulation requirements rise, arc-flash energy increases, and the available component ecosystem narrows. The right voltage tier depends on the application, the local grid, and the scale of the installation. Here is how the four dominant tiers compare.

415V — The Legacy Standard

India's standard LT distribution voltage of 415V three-phase is the default coupling point for small C&I installations (up to ~300 kW). The entire ecosystem — panels, MCCBs, contactors, cables — is mature, widely available, and familiar to every electrical contractor in the country.

The trade-off, as the system size increases is current. A 500kW system at 415V draws 773 A, requiring parallel cable runs of 2×240 mm² per phase and 800 A rated air circuit breakers. Cable trays become bulky, voltage drop over distance becomes significant, and copper costs dominate the BoS budget. For behind-the-meter installations where the BESS sits adjacent to the LT panel, 415V coupling is practical and cost-effective. Beyond 500 kW, it becomes a bottleneck.

UnityESS Model A-4 Series is designed for this tier.

690V — The Industrial Workhorse

690V is the standard for heavy industrial drives, wind turbines, and grid-scale power plants. It occupies a sweet spot: high enough to reduce current by 40% compared to 415V (465 A for 500kW), yet low enough to remain within Low Voltage Directive (LVD) limits in most jurisdictions, simplifying compliance and reducing insulation costs.

At 690V, single cable runs of 300 mm² per phase suffice for 500 kW, and 630 A MCCBs replace the bulkier ACBs needed at 415V. Total copper cross-section drops by 37%, and I^2R losses fall from 0.65% to 0.38% over the same 50 m run. This tier is ideal for large scale solar plants (≥ 2 MW) and industrial campuses where the BESS feeds into an existing 690V bus or where a dedicated 33kV/690V transformer can be justified.

UnityESS Model C-6 Series is designed for this tier.

800V — The New Benchmark

800V AC coupling is emerging as the new, preferred architecture for medium scale C&I BESS installations globally. Driven by the Solar industry's migration to 800V platforms (Ground Mounted Installations) and the maturation of Silicon Carbide (SiC) power semiconductors, the component ecosystem at 800V has reached critical mass.

At 800V, a 500kW system draws only 401 A — 48% less than at 415V. Cable sizing drops to 1×240 mm² per phase, copper cost halves, and I^2R losses fall to 0.35%. The Power Conversion System (PCS) operates at higher efficiency thanks to reduced conduction losses in SiC MOSFETs, and the DC bus voltage of ~1,300V aligns naturally with high-voltage LFP battery strings (416S configurations at 1,331V nominal).

800V also future-proofs the installation for DC coupling. As solar PV strings move to 1,500V and grid-scale applications demand tighter integration, the 800V AC / 1,300V DC platform provides a natural bridge to the next generation of power architectures.

UnityESS Model A2-8 Series is designed for this tier.

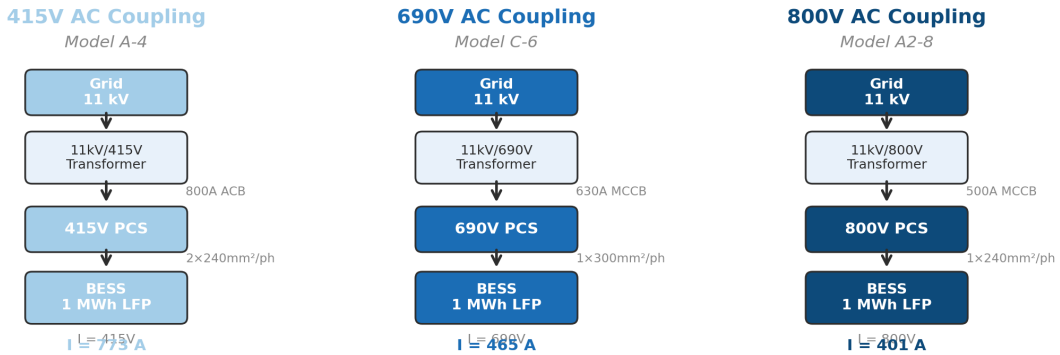

Single-Line Diagram: AC-Coupled BESS at Each Voltage Tier (500 kW / 1 MWh)

Fig 1. Single-line diagram: AC-coupled BESS at 415V, 690V, and 800V (500 kW / 1 MWh reference system)

The Numbers: 1 MWh Worked Example

The table below compares a 500 kW / 1 MWh LFP BESS installation across all three voltage tiers. Assumptions: power factor 0.9, XLPE copper cables, 50 m cable run from PCS to point of coupling, ambient temperature 45°C.

Parameter	415V	690V	800V
Line Current	773 A	465 A	401 A
Cable / Phase	2×240 mm²	1×300 mm²	1×240 mm²
Total Cu (4-core)	1,920 mm²	1,200 mm²	960 mm²
I^2R Loss (50 m)	0.65%	0.38%	0.35%
Copper Cost	100%	63%	50%
Switchgear	800A ACB	630A MCCB	500A MCCB

Copper cost indexed to 415V = 100%. At 800V, the system uses half the copper and loses 46% less energy in cable resistance compared to the 415V baseline.

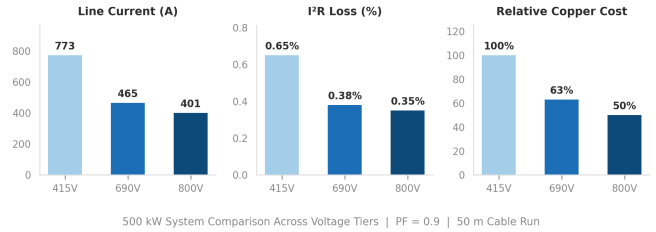

Fig 2. Current, loss, and copper cost comparison across voltage tiers

The Future: DC-Coupled Architectures

The logical endpoint of the voltage escalation curve is to eliminate the AC conversion stage entirely. In a DC-coupled architecture, batteries connect directly to a DC bus at 1,000–1,500V, sharing the bus with solar PV strings and feeding a single centralised inverter for grid export.

NVIDIA's 2025 whitepaper on 800 VDC architecture for AI data centres quantifies the advantage: at 800 VDC, power delivery per mm² of cable cross-section is 157% higher than 415 VAC; at 1,500 VDC, the improvement reaches 382%. The reduction in conversion stages also improves round-trip efficiency — every AC→DC→AC conversion adds 1–2% losses that DC coupling avoids.

Power delivery per cable cross-section (source: NVIDIA, 2025)

Voltage	Wires	kW/mm²	vs 415 VAC
415 VAC	4 (P1,P2,P3,PE)	0.6	—
690 VAC	4 (P1,P2,P3,PE)	1.0	+67%
800 VDC	3 (POS,RTN,PE)	1.7	+157%
1500 VDC	3 (POS,RTN,PE)	3.1	+382%

For BESS applications, DC coupling is especially compelling in hybrid solar+storage plants where the battery can charge directly from PV without double conversion. As power electronics mature and 1,500V-rated battery management systems become standard, DC-coupled BESS will move from the frontier to the mainstream.

Cable Loss vs. Coupling Voltage (500 kW, 50 m, constant cable)

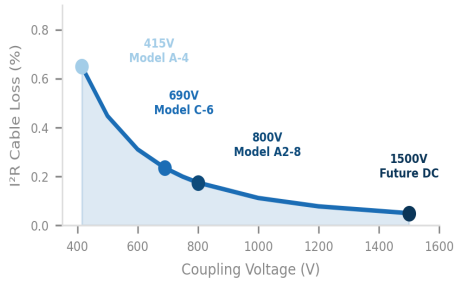

Fig 3. I^2R cable loss falls as an inverse-square function of coupling voltage

Choosing the Right Voltage Tier

The decision is not purely technical — it depends on scale, site constraints, and the existing electrical infrastructure:

Up to 300 kW: 415V is the natural choice. The BESS plugs directly into the existing LT distribution board with no additional transformer. Ideal for small commercial premises, retail, and light industrial.

≥ 2 MW: 690V delivers the best balance of reduced cabling cost and component availability. Particularly suited to factories with existing HT supply where a dedicated 690V transformer can be tapped off the 11 kV incomer.

≥300kW and ≤1MW: 800V becomes compelling. The copper savings alone justify the higher-rated switchgear, and the alignment with utility-scale PCS platforms ensures long-term serviceability and spare-part availability.

Greenfield hybrid plants: Evaluate DC coupling. If the site includes >1 MW of solar PV on 1,500V strings, DC-coupled storage eliminates one conversion stage and can improve round-trip efficiency by 2–3 percentage points.

In every case, the voltage decision should be made early in the design phase — it sets the transformer specification, cable routing, protection coordination, and the PCS platform. Changing it later is expensive.

UnityESS: Platforms Across Every Voltage Tier

Model A-4 Series (415V) | **Model C-6 Series** (690V) | **Model A2-8 Series** (800V)

Learn more: **unityess.ai**

Sources

1. *Huntington, J. & Tu, M. (2025).* 800 VDC Architecture for Next-Generation AI Infrastructure. NVIDIA Corporation.
2. IEC 61439-1:2020 — Low-voltage switchgear and controlgear assemblies.
3. IS 694:2010 / IEC 60502-1 — Power cables with extruded insulation and their accessories.
4. CEA (India) Technical Standards for Connectivity to the Grid, 2023.

DISCLAIMER: This document is for informational purposes only. Technical specifications and performance figures are indicative and may vary based on site conditions, equipment selection, and installation practices. Consult UnityESS engineering for project-specific design. © 2026 UnityESS. All rights reserved.